PerforMax Global
HIGH PERFORMANCE DOORS

460V

TS970

DOOR CONTROL PANEL OWNER'S MANUAL

PerforMax Industrial Doors
5 Crozerville Road, Aston, PA 19014
+1 (484) 840-8500

WWW.PERFORMAXGLOBAL.COM
INFO@PERFORMAXGLOBAL.COM

OPERATING INSTRUCTIONS

Page

SAFETY DIRECTIONS

Basic Directions

This control has been built in accordance with **EN 12453 Industrial, commercial and garage doors and gates - Safety in use of power operated doors - Requirements and EN 12978 Industrial, commercial and garage doors and gates - Safety devices for power operated doors - Requirements and Test methods;** and left the factory in perfect condition from the point of view of safety. To maintain this condition and to ensure safe operation, the user must observe all the directions and warnings contained in these operating instructions.
In principle, only trained electrical craftsmen should work on electrical equipment. They must assess the work which has been assigned to them, identify potential danger sources and take suitable safety precautions.
Reconstruction of or changes to TS 970 are only permissible with the approval of the manufacturer. Original replacement parts and accessories authorised by the manufacturer guarantee safety. Liability ceases to apply if other parts are used.
The operational safety of an TS 970 is only guaranteed if it is used in accordance with the regulations. The limiting values stated in the technical data should not be exceeded under any circumstances (see corresponding sections of the operating instructions).

Safety Regulations

During the installation, initial operation, maintenance and testing of the Control Panel, it is necessary to observe the safety and accident-prevention regulations valid for the specific application.

In particular, you should observe the following regulations (this list is not exhaustive):

European normative

- EN 12445
  Safety in use of power operated doors - Test methods
- EN 12453
  Safety in use of power operated doors - Requirements
- EN 12978
  Industrial, commercial and garage doors and gates -
  Safety devices for power operated doors - Requirements and Test methods

Please check normative´s bellow.

VDE-regulations

- EN 418
  Safety machinery
  Emergency stop equipment functional aspects
  Principles for design
- EN 60204-1 / VDE 0113-1
  Safety of machinery - Electrical equipment of machines - Part 1:
  Prescriptions générales
- EN 60335-1 / VDE 0700-1
  Safety of household and similar electrical appliances - Part 1:
  General requirements

Regulations

- Please ensure that the local regulations relating to the Safety of Operations of Doors are followed

SAFETY DIRECTIONS

Explanation of warnings

These operating instructions contain directions which are important for using the ELEKTROMATEN® appropriately and safely.

The individual directions have the following meaning:

DANGER
This indicates danger to the life and health of the user if the appropriate precautions are not taken.

CAUTION
This warns that the ELEKTROMATEN® or other materials may be damaged if the appropriate precautions are not taken.

General warnings and safety precautions

The following warnings are to be understood as a general guideline for working with the ELEKTROMATEN® in conjunction with other devices. These directions must be observed strictly during installation and operation.

Check that all screw connections are secure before operating the control and adjusting the limit switches.

- Please observe the safety and accident prevention regulations valid for the specific application.
- The ELEKTROMATEN® must be installed with the authorised coverings and protective devices. Care should be taken that any seals are fitted correctly and screw couplings are tightened correctly.
- In the case of ELEKTROMATEN® with a permanent mains connection, an all-pole main switch with appropriate back-up fuse must be provided.
- Check live cables and conductors regularly for insulation faults or breakages. When a fault is detected in the cabling, the defective cabling should be replaced after immediately switching off the mains supply.
- Before starting operation, check whether the permissible mains voltage range of the devices corresponds to the local mains voltage.
- With three – phase motor connection it must have right phase rotation

INSTALLATION ADVICE

After the ELEKTROMATEN® is fitted we recommend the following procedure to rapidly reach a fully functioning door.

• Installation	**Enclosure installation**	page 10
• Installation	**Wiring the Drive to the Control**	page 10
• Check	**Mains supply**	page 11
• Check	**Phase rotation**	page 12
• Programming	**Rapid limit adjustment**	page 13

The door is ready to work in Dead man mode.

• Installation	**Safety devices**	page 15, 23
• Programming	**Door functions**	page 16

The door is ready to work in automatic mode.

Check connection of external devices e.g. push button etc.
Overview to connect external devices see diagram (page 15).
After the devices are connected the programming of the control panel must be finalised (page 16).

INSTALLATION OVERVIEW

Important!
Using the connection cable out side the building is not permitted.

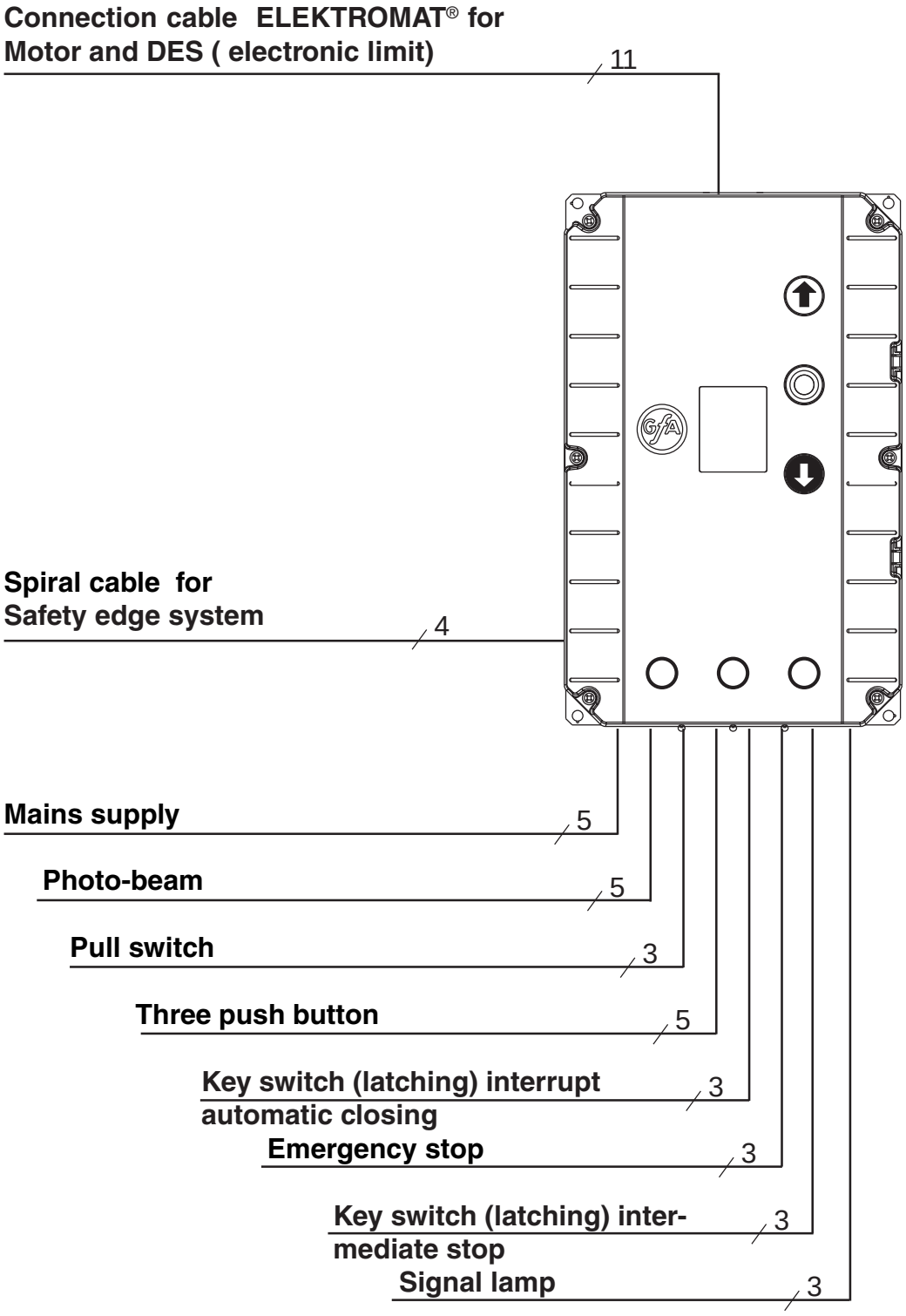

( ) Number of cores in the cable

ENCLOSURE INSTALLATION

Before mounting the enclosure, the surface has to be checked for flatness, slope and freedom from vibrations. Mounting must be vertical. It is important that the door can be clearly seen from the position of the control through-out its travel.

CONNECTING THE CONTROL AND THE ELEKTROMATEN®

After the drive and control are fitted they can be connected with a plug-in cable. The cable has plugs on each end and for easy fitting. The plugs for motor and control panel are different and cannot be interchanged.

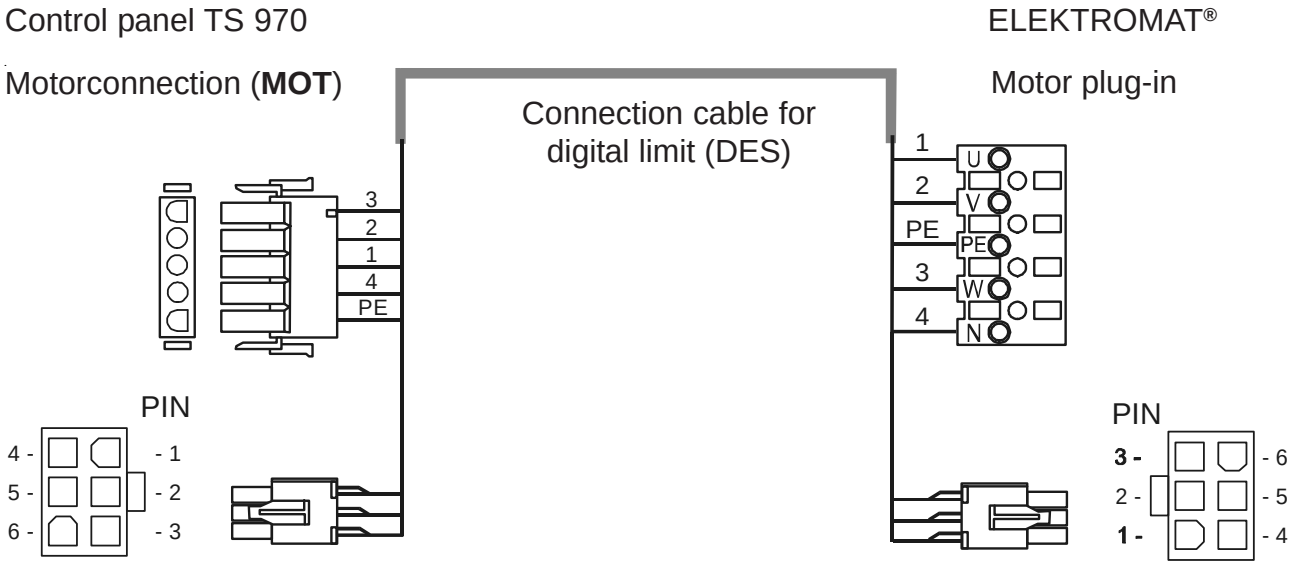

Cable identification

Motor plug to control unit

PIN	- Wire-No.	Execution:
1	- 3	Phase W
2	- 2	Phase V
3	- 1	Phase U
4	- 4	Neutral (N) (not used)
5	- PE	Earth

Limit plug-in to control panel TS 970 (**DES**)

PIN	- Wire-No.	Execution:
1	- 5	Safety chain 24V DC
2	- 6	RS485 B
3	- 7	GND
4	- 8	RS485 A
5	- 9	Safety chain
6	- 10	8V DC

MAINS SUPPLY

DANGER! To the life and health through electric shock.
If a GfA frequency drive FI is installed, it must be used a class B earth-leakage circuit breaker in the mains supply. Other switches can fail and switching unintentionally.

Important note!
The bridge must be fitted into the right terminal otherwise the PCB print could be destroyed.

External fuse!
Control must be saved against short circuit and overload by an external fuse, max. 10A delayed, in the mains supply. An automatic cut off switch is required, regarding the supply for three-phase or single-phase.

When connecting control to mains supply a mains isolator switch or (16A CEE – plug) according EN 12453 is required. The supply disconnect device (Main switch or CEE plug) must be installed between 0,6m and 1,7m above floor level.

The CONTROL PANEL TS 970 has a universal electric supply and works with the following supplies. (See diagram Fig.1-5)

Mains supply terminal

Fig.: 1

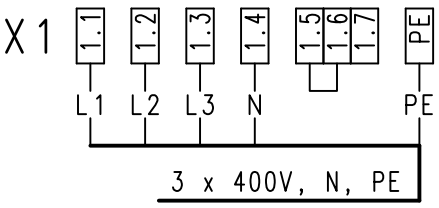

Fig.: 2

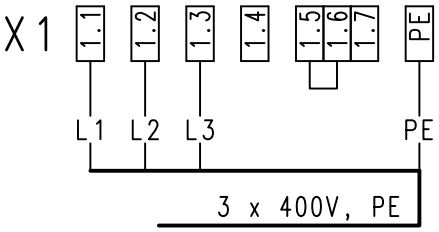

Fig.: 3

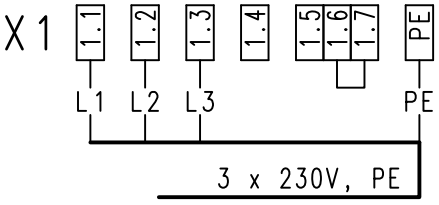

Fig.: 4

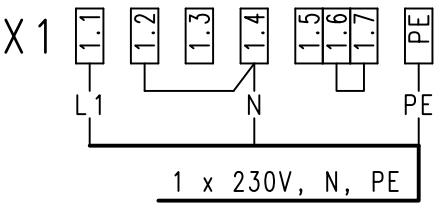

symmetric winding

Fig.: 5

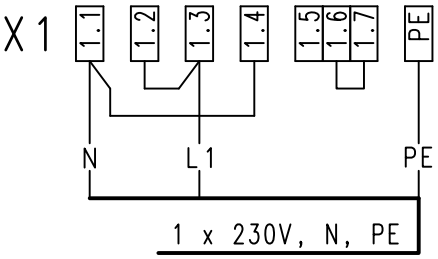

asymmetric winding

400V – mains supply = 1.5 / 1.6
230V – mains supply = 1.6 / 1.7

DU	=	3x400V	
FI 1,5KW	=	1x230V/N/PE	or 3x400V/N/PE
FI 4,5 kW	=	3x400V/PE	or 3x400V/N/PE

MOTOR CONNECTION (internal wiring)

Three-phase 3 x 400 V AC, N, PE
Star connection

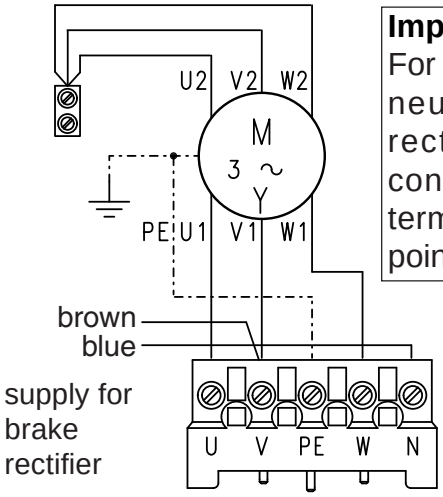

Important note!
For 3x400V AC PE no neutral, the brake rectifier must be connected between terminal V and star-point terminal.

Three-phase 3 x 230 V AC, PE
Delta connection

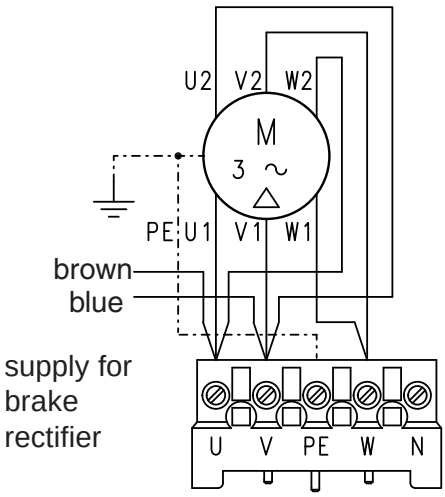

Single-phase 1 x 230 V AC, N, PE
symmetrical winding

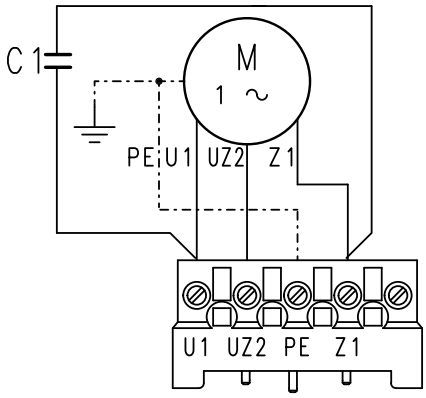

Single-phase 1 x 230 V AC, N, PE
asymmetrical winding

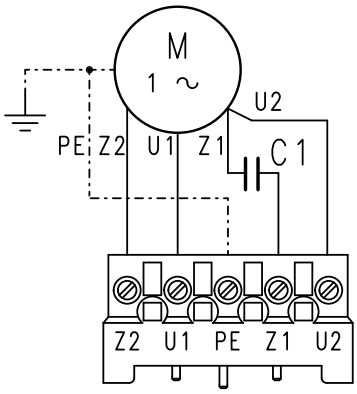

On several ELEKTROMATEN® the connection U1 und V1 on the motor-plug are interchanged.

PHASE ROTATION

Important Notice!
After the mains supply has been connected: to confirm that the phase rotation of the electrical motor is correct the door shall move UPWARDS if the OPEN push button is operated. If the door does not OPEN change first phase rotation.
For all three phase ELEKTROMATEN® even DU: Change wiring at terminal X1: 1.1 – 1.2.
For inverter drives FI-ELEKTROMATEN® see page 13.
For all single phase ELEKTROMATEN® :Change wiring at the connection cable plug, change core no. 1+3 reciprocal.

DANGER! To the life and health through electric shock.
Before mounting the mains supply must be switched OFF.

RAPID ADJUSTMENT OF THE LIMITS

When the phase rotation has been checked the Rapid limit adjustment can be made.
The final setting can be made with the fine adjustment (Control Programming page 17). Safety limits and pre-limits are automatically adjusted.

1. Setting final limit open

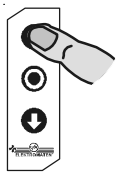

Door open

press button to reach upper limit

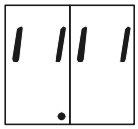

Display blinking

1a. Reversing FI-ELEKTROMAT® rotation

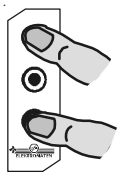

To reverse the motor rotation keep both buttons pressed for three seconds until the display changes

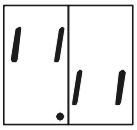

Display blinking

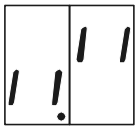

Display changes

2. Memorise the final limit open

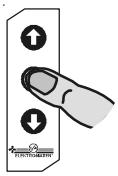

Press stop-button for 3 sec. until the display changes

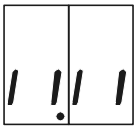

Display changes

> ⚠ The final limit OPEN is memorised when the door moves for at least one second from close into the upper limit position.

3.Setting the final limit close

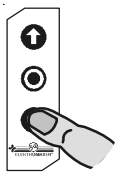

Door close

press button to reach lower limit

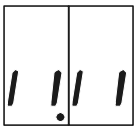

Display blinking

4. Memorise the final limit close

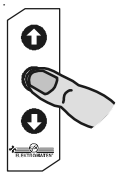

Press stop-button for 3 sec. until the display changes

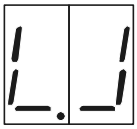

Display changes

The Rapid adjustment is finished

The door could be moved in DEADMAN mode UP/DOWN
Further adjustments see programming mode

HARDWARE OVERVIEW

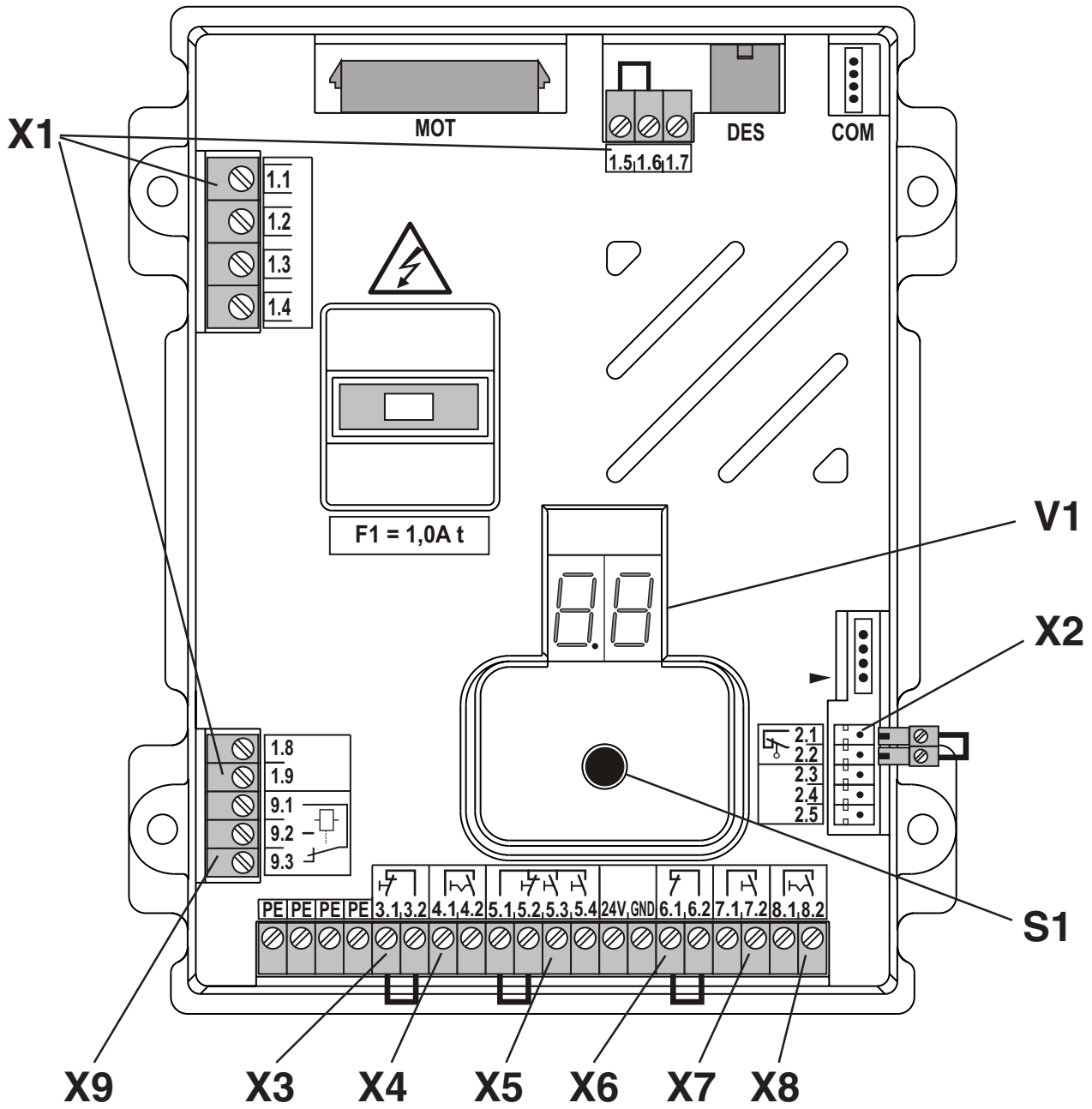

Description Print:

X1 Mains supply
external supply 230V
1.9 = L1 fused with F1 = 1A
1.8 = N (only with 3 x 400V, N, PE
and 1 x 230V, N, PE symmetric winding)
X2 Safety edge system and pass-door plug
X3 Emergency push button
X4 Key switch (latching) interrupt automatic closing
X5 Three push button / key switch
X6 Light barrier reflective or receiver- transmitter type
X7 Ceiling pull switch / Radio control
X8 Key switch for intermediate stop
X9 Potential free relay contact
warning light or annunciator

S1 Selector switch
V1 7-segment display
MOT Motor connection
DES Limit connection
COM Interface
► Internal push button

WIRING DIAGRAM

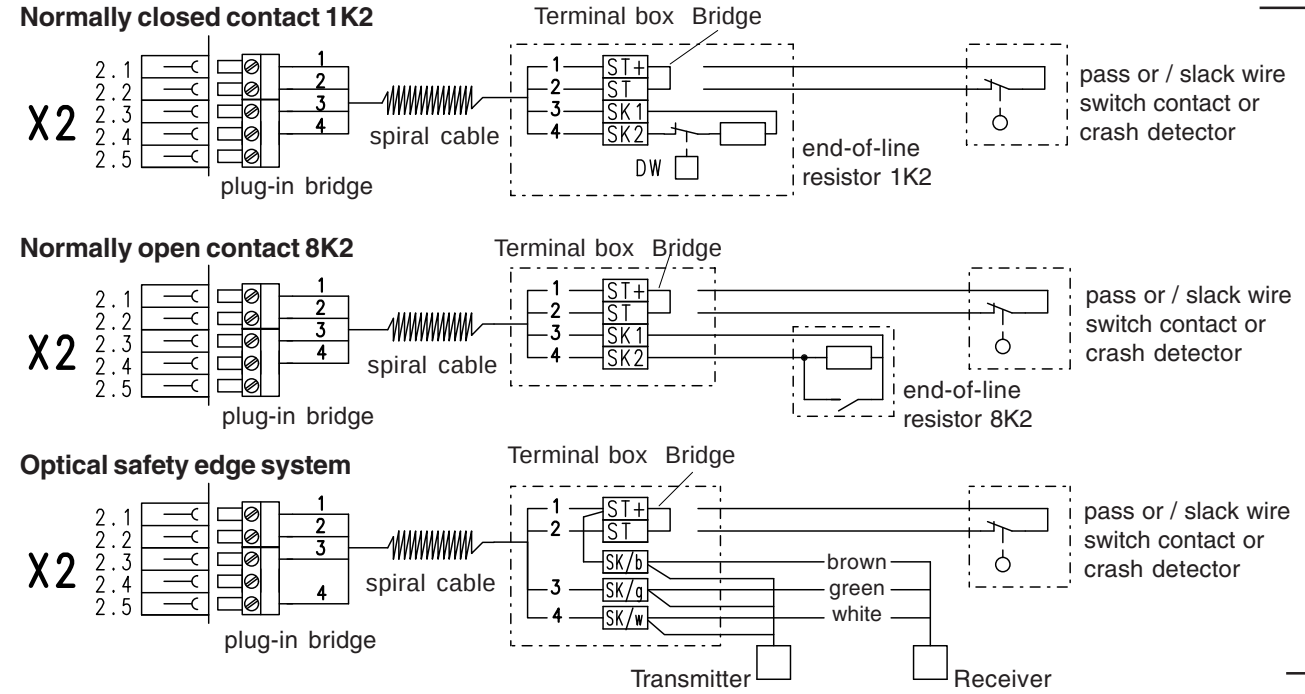

Page 23- 26

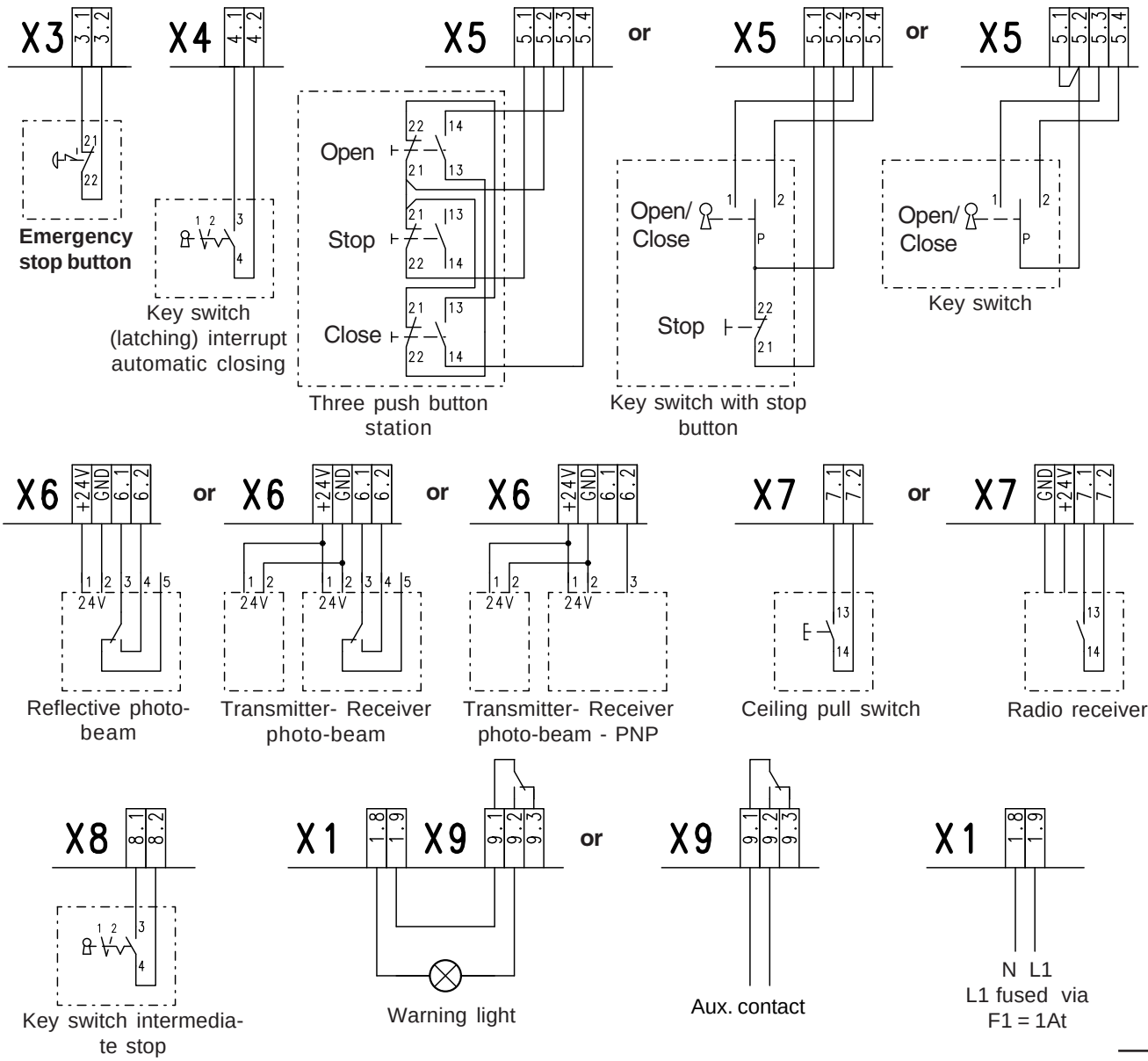

Page 26 - 29

CONTROL PROGRAMMING

1. Enter programming Mode

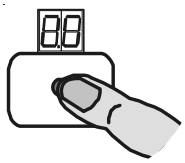

Press selector switch for 3 sec. until **display = 00**

2. Chose program and confirm

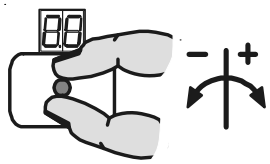

Turn selector

and

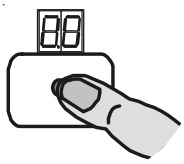

Press selector

3. Adjustment

Functionen

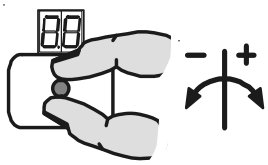

Turn selector

or

Door position

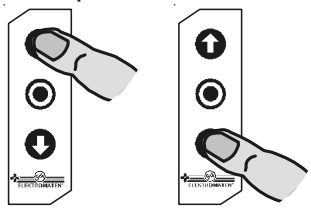

Press foil buttons

4. Memorise

Functionen

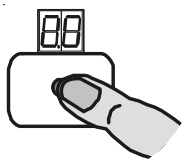

Press selector

or

Door position

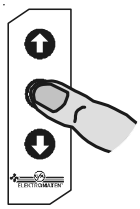

Press stop-button

further adjustments

5. Exit programming

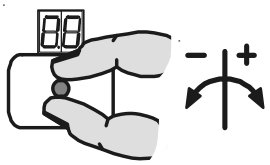

Turn selector until display = 00

and

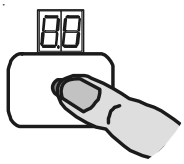

Press selector

CONTROL PROGRAMMING

2. Choose program and confirm		3. Adjustment	4. Set
Operating mode			
01 Door function	– +	1 Dead man OPEN Dead man CLOSE	Press selector
		2 Self-hold OPEN Dead man CLOSE	
		3 Self-hold OPEN Self-hold CLOSE	
		4 Self - hold OPEN, CLOSE (X5) release for external pushbutton function only dead man close	
Door position			
11 Final limit open coarse adjustment	↑ ↓	Move door upwards or downwards	Press stop Button
12 Final limit close coarse adjustment	↑ ↓	Move door upwards or downwards	Press stop Button
13 Final limit open fine adjustment	– +	10 Final limit open can change without door movement using +/-	Press selector
14 Final limit close fine adjustment	– +	10 Final limit close can change without door movement using +/-	Press selector
15 Pre-limit safety edge fine adjustment	– +	10 Pre-limit safety edge can change using +/-	Press selector
16 Intermediate stop	↑ ↓	Move to intermediate stop	Press stop Button
17 Relay switch position	↑ ↓	Move to relay switch position	Press stop Button

2. Choose program and confirm	3. Adjustment	4. Set
Functions		
21 Safety edge function in Pre - limit area	1 Safety edge is activated 2 Safety edge is deactivated 3 Safety edge is activated + automatic ground adjustment 4 Active safety edge + re-open	Press selector
22 Overrun correction	0 OFF 1 ON	Press selector
23 Automatic closing feature	00 time can be set between 1 - 240 sec. 0 = OFF	Press selector
24 Automatic closing after photo-beam is interrupted and re-made	0 OFF 1 Immediately closing with pre-warning 2 Vehicle recognition, closes when the contact is more than 1,5 sec. triggered	Press selector
25 Relay function	0 OFF 1 Switch contact impulse signal 2 Switch contact continuous 3 Signal lamp starts flashing with 3 sec. pre-warning time when door Open's and Close's; Continuous light while the door is moving 4 Signal lamp starts flashing with 3 sec. pre-warning time, in close-direction only; Continuous light while the door is moving 5 Signal lamp: Only supply for continuous Red light or external signal lamp with relay 6 Signal lamp: Continuous red light with 3 sec. pre-warning from open position	Press selector

CONTROL PROGRAMMING

2. Chose program and confirm	3. Adjustment	4. Set
Functions		
26 Step by Step function (X7): only Ceiling pull switch / Radio remote control	1 Commands door travels to Open or → Closed position during closing door Stops and re-opens 2 Commands Open→Stop→Close→Stop→ Open	Press selector
Safety functions		
31 Door overload monitor	0 OFF 1 sensitive 2 insensitive	Press selector
32 Photo beam interrupt function	0 OFF 1 ON	Press selector
34 Function: Door safety switch	1 Slake rope / Pass door 2 Crash detector via NC Contact 3 Crash detector via NO Contact	Press selector
38 This is the reaction time actuation of the safety edge up to the moment that the door re-opens	0 Normal re - open time 1 Re - open time reduction 1 Re – open time extension Three adjustment levels available	Press selector

2. Choose program and confirm	3. Adjustment		4. Memorise
Settings only for ELEKTROMATEN® with direct / frequency converter DU/FI			
41	OPENING speed	00	Output speed rpm	Press selector
42	CLOSING speed	00	Output speed rpm	Press selector
43	HIGHER CLOSING speed	00	Increased output speed down to door height of 2.5 m 0 = OFF	Press selector
44	Changeover position CLOSING speed	– –	Changeover position higher/lower speed	Press stop Button
45	UPWARD acceleration	00	Setting for DU in 1.0 s steps FI in 0.1 s steps	Press selector
46	DOWNWARD acceleration	00	Setting for DU in 1.0 s steps FI in 0.1 s steps	Press selector
47	UPWARD deceleration	00	Setting for DU in 1.0 s steps FI in 0.1 s steps	Press selector
48	DOWNWARD deceleration	00	Setting for DU in 1.0 s steps FI in 0.1 s steps	Press selector
49	Creep-speed	00	Output speed rpm	Press selector

The appeared numbers for output speed OPEN and CLOSE corresponding to the real RPM of the drive unit. The speed has a direct influence into operating forces of the door. The maximum and minimum speed will be delivered by the drive unit in use and can not be raised or reduced.

Check again the adjustment and drive unit's speed.

The adjustment of acceleration and deceleration is given by the control panel and can be adjusted as follows:

At **DU** from 1,0 – 3,0 seconds in steps of 1 seconds.

At **FI** from 0,5 – 3,0 seconds in steps of 0,1 seconds.

2. Chose program and confirm	**3.** Adjustment		**4.** Set
Maintenance cycle counter			
05 Counter adjustment	– +	00 01-99 correspond from 1.000 up to 99.000 Count down cycles	Press selector
06 Reaction when reaching 0	– +	01 Display appears „CS“ and adjusted number of cycles 02 Changing to DEADMAN display appears „CS“ and adjusted number of cycles 03 Changing to DEADMAN same as 0.2 reset to about 500 cycles possible, press 3 sec. Stop – Button	Press selector

MEMORY CHECK

2. Chose program and confirm		Displayed
91 Info Cycle counter 7- digit	Press selector	M HT ZT T H Z E The cycles would be displayed as follow. M = 1.000.000 H = 100 HT = 100.000 Z = 10 ZT = 10.000 E = 1 T = 1.000
92 Info last 2 faults	Press selector	Last 2 faults would be alternately displayed.
93 Info Program changes 7- digit	Press selector	M HT ZT T H Z E The Number of program changes would be displayed as follow. M = 1.000.000 H = 100 HT = 100.000 Z = 10 ZT = 10.000 E = 1 T = 1.000
94 Info Program version	Press selector	Program version will be displayed

RESET

2. Chose program and confirm	**3.** Adjustment		**4.** Set
95 RESET except cycle- and Program change counter	↑ ↓	1 Reset	Press stop button 3 sec.

Door safety switch X2

This switch could be fitted on to the surface of the door and will be connected with the spiral cable into the control panel. This door safety switch can used and programmed in two functions.

Menu 3.4 a change of function can be realised.

Function	Reaction following the activation	
Slake rope / Pass door	Contact interrupted: Contact closed:	No reaction door stops Door ready to run.
Crash detector	Contact interrupted: Contact closed:	Door will stop immediately out of the movement. Switches the door function into Dead Man Mode. (If a GfA frequency inverter drive would be in use, the function changes to very slow speed). A reset is available and made when pushing the built-in stop button for a minimum of three seconds.

Safety edge system X2

The control recognizes and works with 3 different safety edges.
Each one needs a special 4 core spiral cable and includes an optional shutter pass - door or slack wire switch contact.
The spiral cable connection must be made on the print with the plug provided. The opposite side of the cable is connected to a terminal box or a signal (pressure switch) emitter.

Typ 1: Resistance evaluation 1K2 with normally closed safety edge contact

This evaluation system is made for pressure-wave switches (N/C) within an end-of-line resistor of 1K2 +/- 5% 0,25W.
A pressure wave is generated by compressing the rubber profile, which is conducted to the pressure-wave switch through the plastic hose. The system should be tested in the CLOSE position. The pre-limit would be set automatically and activate the "Testing function".

When the shutter runs over the pre-limit door position, a timer of two seconds starts to countdown at once. If a pressure wave activates the pressure switch in this time the TS 970 recognizes the function of the safety edge. If the pressure switch has not been activated, the control goes into fault mode and the system works only in DEAD MAN function in downwards direction. Fault information F 2.8 would be displayed.

Pressure-wave switch - function

The contact between the contact screw and diaphragm is opened (opening contact). The pressure-wave switch is set to a release pressure of approx. 1,5 mbar.

The valve screws are set to a throughput of 110 ml/min with a static admission pressure of 5 mbar. This warrants that a maximum temperature increase of 30° is compensated for in 20 minutes.

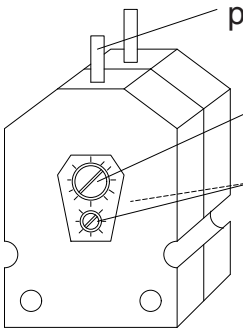

Pressure-wave switch

The setting of the valve screws may not be altered. Should the release pressure be insufficient (pressure wave too insensitive), the contact screw may be turned counterclockwise to the left by 1-2 graduation marks. The switch's sensitivity is thus increased.

In case of excessive sensitivity, the contact screw is set clockwise by 1-2 graduation marks (decreased sensitivity).

Typ 2: Resistance evaluation 8K2 with normally open safety edge contact

This evaluation system is made for electrical safety edges within an end-of-line resistor of 8K2 +/- 5% 0,25W. The resistor must be connected parallel with the switch in the safety edge.

Typ 3: Optical safety edge (Vitector)

The principle of operation is as a one way light barrier. By activating the safety edge, the photo-beam will be interrupted.

Important note!
When connecting a safety edge, take account of EN 12978 for Industrial, commercial and garage doors and gates - Safety devices for power operated doors - Requirements and Test methods.

Mounting the spiral cable

A bush is provided on both sides of the control box for mounting the spiral cable.
Push the plugs through into the enclosure until there is sufficient cable to allow the (2 and 3 pole) plugs to be connected to the board. The plug with two cores must be connected to the passdoor or slack wire switch terminals. The three core plug must be connected to the safety edge terminal.
The control panel TS 970 recognizes on first installation the safety edge system being used.
If passdoor / slack wire switch contact exists, remove bridge at terminal ST and ST+ in the terminal box. The plug at terminal X2 must be removed.

Important note!
When using a safety edge system the automatic pre-limit adjustment must be checked. When the safety edge is activated the door should stop and reverse to the open position.

Function of the safety edge system

With **Menu 2.1** the function of the safety edge system can be chosen.

Function	Reaction following the activation
Active safety edge	stop
De-activated safety edge	no reaction, door moves until final limit close only for folding doors
Active safety edge+ downward automatic floor adjustment	stops and automatically re-adjusts the final limit with the next movement
Active safety edge + re-open	Re-opens the door up to the half way of the overrun way

The function 'Auto ground adjustment' is used for doors with a cable e.g. Sectional doors or vertical lift-gate. An automatic correction of slackness or change of ground height up to 2-5 cm is possible. The slack wire switch is be still recognised.

Important note!
To use the automatic floor adjustment, the safety edge must be operated in the door closed position by an auxiliary puffer switch.

Important !
The automatic ground adjustment works only when the following safety edge systems are connected:
Typ 2: electrical system resistance evaluation 8K2 or **Typ 3:** optical safety edge (Vitector)

The active safety edge function with re-open function shall be used only if the overrun way of the door will be more than 5cm.

Important note!
When the safety edge has been operated twice the automatic closing feature will be interrupted and fault F2.2 will be displayed.
To reset the fault press the internal push button ⬇ so that the door travels down until the final limit is reached.

Pass door / slack rope switch input X2

The pass door switch Entrysense features a protective function complying with safety category 2 under EN 954-1. The electrical contact is monitored by the control panel that outputs **fault F1.7** when it malfunctions.

The electronic pass door switch Entrysense: function and test

The pass door switch Entrysense is fitted with two reed contacts that are switched by a permanent magnet. The control panel evaluates the switching states and the contact resistance independently of each other.

At the lower limit position **F1.2** is displayed when an OPEN command is given and at the same time the pass door / slack rope switch circuit is open. The door can be moved only after the pass door has closed or when the pass door / slack rope switch circuit signals OK. If the circuit will be opened when the door is moving the door is stopped immediately.

F1.7 is displayed when an OPEN command is given after the door controller has detected beforehand asymmetrical pass door switch positions (see below for reasons). This fault can be reset when the door is reopened. This ensures that contact misalignments caused by vibrations from the moving door do not trigger door shutdown.

Possible reasons for fault F1 .7

Decription	Measures to solve the problem
Door was not fully closed for longer than 2 s so that only one reed contact was switched during this time.	Reopen and close the door.
The control voltage was less than 21,6V for longer than 2 s (by 10%).	Measure the control voltage at the terminals 24V-GND. After troubleshooting reopen and close the door.
Contact resistances too high in the pass door / slack rope switch circuit	With the pass door closed: Measure resistance and if necessary replace the contact resistances in the pass door / slack rope switch circuit.
Electronic pass door switch is not installed correctly: • distance between switch and magnet too large • switch and magnet not attached at the same height • switch installed at wrong position	Check that the shutter pass door switch is installed correctly. After troubleshooting reopen and close the door.

Emergency stop X3

These terminals are to connect an emergency stop button according to EN 418. Alternatively the terminals can be used to connect a safety device against entrapment (e.g. self-testing light barrier).

Key switch (latching) interrupt automatic closing X4

The automatic closing time can be interrupted with a normally open switch (latching)

Internal push button / Three push button / Key switch X5

Internal and external push button

Internal and external push button working seperately from each other. Pushing at the same time, the internal push button has priority.

Important note!
Deadman mode UP and DOWN with internal push button.
Deadman mode DOWN with external push button. (**Menu 0.1 Adjustment 0.4**)
In Deadman mode the user shall be in full view of the door throughout its travel.

Automatic closing

Menu 2.3 the timer works between 1 - 240 sec. If the automatic closing is active, the shutter will close, from each limit position after the pre-adjusted time.

Important note!
The timer can be interrupted by pressing the internal pushbutton stop when the shutter has reached a limit position. With a new command UP / DOWN the timer is re-set.

Automatic closing interruption

Menu 2.4 can be used if the timer operation is required after interrupting and re-making the photo-beam. The door closes after 3 seconds.

Photo-beam for Closing Direction X6

One external photo-beam (thro' beam or reflective photo beam) can be connected to the control. A 24V DC supply for the photo-beam is available.

Important note!
The load on the 24V DC power supply may not exceed 150 mA.

FUNCTION DESCRIPTION

The light barrier is used in a normally closed operating mode.
In case the light barrier is activated or it malfunctions the contact will open and cause following reactions.

Door Position	Reaction when Photo-beam is Interrupted
Door closed	no reaction
Door opening	no reaction
End position open *) without timer active	no reaction
End position open *) with timer active	resets open timer for automatic closing mode
End position open *) with timer active and time interruption	With the photo-beam connected the shutter closes after 3 sec. when the beam has been interrupted and remade The time delay is cancelled and re made.
Closing Door	Stops and re-opens fully *)

*) or to the intermediate stop position when the key switch is in the on position

Interruption of the photo beam function - Menu 3.2

To learn the switching position the door should travel 2 full OPEN and CLOSE cycles.
During the closing travel the photo beam shall be switched (interrupted) two times consecutively at the same switching position. If that was happen the position is memorised. Thereafter the photo beam is without function bellows this switching position.

After the program was selected and left a 2 appears into the display (see fig.)

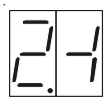

With the first interruption of the photo beam the display changes to 1

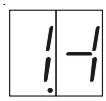

and after the second interruption it changes to CLOSE (see fig.); the function is activated.

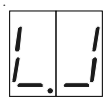

If the **adjustment was not successful** a 2 will be displayed for short. If so the last switching position will be the new first position and the display appears a 1. The door must travel a new cycle that the second position will be memorised.
After programming, proper function must be checked.

Important note!
While programming the functions re-open and timer (automatic closing) interruption, when passing the photo-beam, is not in work.

FUNCTION DESCRIPTION

Ceiling pull switch / Radio control X7

It is possible to connect a ceiling pull switch or a radio receiver.
The radio receiver's switching contact must be potential free. A small receiver can be fitted into the upper part of the housing under the cable entry.
With each command (contact) the shutter operates in the following sequence:

Shutter position	Shutter operation
Shutter closed	Shutter moves to fully open or intermediate position
Shutter moving upwards	No reaction
Shutter open	Shutter moves to fully closed position
Shutter intermediate position open	Shutter moves to fully closed position
Shutter moving downwards	Shutter will STOP and moves BACK UP to final open Position*)
See commands page 19, Control menu 2.6 Adjustment 0.2 step by step function	

*) or to the intermediate stop position when the key switch is in the on position

Key switch – intermediate stop X8

Intermediate stop can be activated / de-activated by connecting a key switch (latching ON-OFF). The intermediate shutter position „ PART OPEN“ is only in effect in the upwards direction and is the new open position.
In **Menu 1.6** the position can be adjusted. This is the new final position.
By turning the key switch to the OFF position, the shutter works in standard mode.

Important note!
To ensure error free function of the panel, the terminal X8 must not be used without intermediate stop adjustment.

Potential free changeover contact X9

In **Menu 2.5** this contact is able to work for several functions.

Important note!
Only one relay function can be adjusted.

When activating the switching point the shutter must be moved to the point. **Menu 1.7** must be activated.

FUNCTION DESCRIPTION

Overrun correction

The stopping position of the door can be influenced by various factors e.g. temperature, cable extension etc.
To always have the same door stopping position the overrun correction can be activated.
Using **Menu 2.2** the overrun correction can be switched ON or OFF

Important!
Great variations of temperature during a time when the door is not in use, could cause a position variation of about 1cm. This will be reset automatically after reaching the final close limit.

Door overload monitor

The door overload monitor recognises that a person is being lifted by the door (hanging on a handle, etc.) and could be adjusted within **Menu 3.1** with a possibility of two steps of sensitivity.
Adjustment 0.1 sensitive reaction and adjustment 0.2 insensitive reaction

Important!
After programming the force monitoring the door must perform a complete opening and closing cycle in automatic mode, during which the system reads the increments to calculate the way.

Important Note!
To have a trouble-free service the following points must be checked:
- The door must be correctly balanced
- The cable drum diameter should not be less then 160mm

Environmental influences e.g. temperature or wind load can cause the overload monitor to be activated.

The overload monitor is a self-learning system, and checks the system from 5 cm up to ca. 2,0 m, slow-occurring changes e.g. spring tension will be automatically recognised and equalized.

Important Note!
The overload monitor does not take place against other safety devices e.g. (safety against entrapment)

When an overload is detected the door works only Dead man Mode in the UP and DOWN direction.
The control unit automatically resets to impulse control when a final limit position has been reached.

Maintenance cycle counter

Free adjustable maintenance cycle counter **Menu 8.5** makes it possible to pre-adjust a max. No of cycles until a maintenance is agreed.

The no of cycles can be adjusted from 1.000 up to 99.000; the adjustment is possible in steps of 1.000 cycles.

Three different reactions can be chosen if the point of pre- adjusted maintenance cycles has been reached, see **Menu 8.6**

Whenever the final open limit has been contacted the pre-adjusted number will be reduced with 1 until 0 is reached.

When maintenance was done the cycle counter could be re-adjusted to a new maintenance period and count down starts again.

Short circuit / overload monitor

The TS 970 control panel delivers 2 supplies for external devices.

230V AC; max. 1A
24V DC; max. 150mA

At a short circuit or overload at the 24V DC supply, the display is off.

OPERATING STATUS DISPLAY

The control TS970 can display up to three different status conditions one after another. Each status is displayed with a letter and a number. The letter and the number are flashing alternately, thereby the control differentiates between a FAULT = **F** and a command = **E.**

Report	Description	Measure to solve the problem
F 12	**Door safety switch** **Pass door contact open** **X 2.1- X 2.2**	**Check the proper operation of pass door contact, or whether the supply cable is broken**
13	**Emergency operator or motor-winding thermal protection operated**	**Check emergency operator or whether the drive unit is overloaded.**
14	**Emergency stop activated**	**Check the emergency stop is activated, or whether the supply cable is broken**
17	**Failure pass door contact X 2.1- X 2.2 or control voltage circuit less than 24V**	**Check pass door circuit's transition resistance and weather pass door switch works; verify the voltage is OK at 24V terminal to GND. Fault acknowledgement: open and close the pass door switch or switch OFF and ON the main switch or disconnect and reconnect the mains plug.**
18	**Failure input pass door X 2.1- X 2.2**	**Fault acknowledgement: switch OFF and ON the main switch or disconnect and reconnect the mains plug.** **If necessary replace the control panel.**
E 20	**Safety edge not recognised**	**Check the safety edge is connected correctly or the wrong type has been selected in the program**
E 21	**Light barrier activated**	**Check the light barrier has been fitted properly, or whether the connecting cable is broken**
E 22	**Safety edge operated in two consecutive cycles**	**Check if there is an obstacle in the shutter area, or the connecting cable is broken or there is a short circuit in the cable**
E 24	**Safety edge 8K2 activated**	**Check the safety edge is activated or there is a short circuit in the connecting cable**
E 25	**Safety edge 8k2 defect**	**Check safety edge and connecting cable are not broken**
E 26	**Safety edge 1K2 activated**	**Check safety edge and connecting cable are not broken**
E 27	**Safety edge 1k2 defect**	**Check safety edge and connecting cable do not have a short circuit**
E 28	**Safety edge 1k2 pneumatic system TESTING negative**	**Check the proper safety edge function and that testing in the lower door position is correct**
E 29	**Optical safety edge activated or defect**	**Check the proper safety edge function or whether the supply cable is interrupted**

OPERATING STATUS DISPLAY

Report	Description	Measure to solve the problem
F 30	Limits not adjusted	Adjust limits
31	Safety open limit operated	Turn mains supply OFF and move the shutter downwards - with the manual operator- until the safety limit is free or the open limit should be re-adjusted.
32	Safety close limit operated	Turn mains supply OFF and move the shutter upwards - with the manual operator- until the safety limit is free or the close limit should be re-adjusted.
41	Door load monitor has activated	Check the door mechanism for tightness
45	Door safety switch: function Crash detector interrupted. X2.1-X2.2	Check the switch is proper fitted or activated. After fault repair: Press Stop button for a minimum of 3 sec.
51	ROM - Fault	Fault acknowledgement: open and close the pass door switch or switch OFF and ON the main switch or disconnect and reconnect the mains plug.
52	Internal fault report	Fault acknowledgement: open and close the pass door switch or switch OFF and ON the main switch or disconnect and reconnect the mains plug.
53	RAM - Fault	Fault acknowledgement: open and close the pass door switch or switch OFF and ON the main switch or disconnect and reconnect the mains plug.
54	Internal control fault	Fault acknowledgement: open and close the pass door switch or switch OFF and ON the main switch or disconnect and reconnect the mains plug.
55	DES – no response	Check electronic limit DES connection. Fault acknowledgement: open and close the pass door switch or switch OFF and ON the main switch or disconnect and reconnect the mains plug. If necessary replace the control panel or digital limit DES).
56	Drive unit does not work	Check the shutter mechanics. Check the limit shaft for function (turning) Check phase rotation.
57	Phase rotation failure	Check main supply phase rotation turns right
58	Inadmissible door movement when stopped, e.g. owing to worn brake or by a failure delivered from the inverter.	Fault acknowledgement: with next command being given. Check function of the brake and replace if necessary. If the brake works correct and if the fault reappears replace the frequency inverter.
59	The drive does not follow the given command e.g. torque overload or a failure at the frequency inverter.	Fault acknowledgement: with next command being given. Check drives load and mains voltage. If this is correct and if the fault reappears replace the frequency inverter.

OPERATING STATUS DISPLAY

Report	Description	Measure to solve the problem
F 61	Closing rpm over speeded at DU / FI	Fault acknowledgement: switch OFF/ON on the mains or disconnect and reconnect the mains plug and if the fault reappears replace the frequency inverter.
62	Internal FI communication fault at FI.	Fault acknowledgement: switch OFF/ON on the mains or disconnect and reconnect the mains plug and if the fault reappears replace the frequency inverter.
63	Insufficient mains supply or by a fault delivered from FI.	Fault acknowledgement: with next command being given. Braking time must be increased, see menu.
64	Intermediate circuit overload, e.g. braking time too short	Fault acknowledgement: with next command being given. Braking time must be increased, see menu.
65	Exceeding of the admissible temperature of the FI e.g. delivered by exceeded no cycles, heat accumulation, heat transmission etc.	Fault acknowledgement: with next command being given.
66	Exceeded motor current by overload of the drive unit or failure at the frequency inverter.	Check the door mechanism and weight. Fault acknowledgement: with next command being given and if the fault reappears replace the frequency inverter.
67	Fault brake / FI	Check brake, replace if required. If the fault reappears replace frequency inverter.
69	FI Group status	Fault acknowledgement: with next command being given and if the fault reappears replace the frequency inverter.

OPERATING STATUS DISPLAY

Report	Command description
E 11	open command being given
12	stop command being given
13	close command being given

CS	adjusted cycles for maintenance reached

	Display off = short circuit or overload at the 24V DC supply

Report	Status
flashing	opening
flashing	closing
	door stopped between set limits
	door stopped at upper limit
	door stopped at lower limit

TECHNICAL DATA

Housing Dimensions	190mm x 300mm x 115mm (W x H x D)
Mounting	vertical
ELEKTROMATEN® Supply	Three-phase 3 x 230 / 400V AC ± 5%, 50...60Hz Single-phase 1 x 230V ± 5%, 50...60Hz Power max. at 3 x 400V AC, max. 3kW
Control supply via L1,L2	400V AC or 230V AC + - 10%, 50-...60Hz, voltage changing with bridge to 3- pole terminal, safety fuse F1 (1A t)
External supply fuse	10A delayed
Permitted Load	ca. 15 VA (without motor and ext. 230V)
External supply 1	230V via L1 and N, safety fuse F1 (1A t)
External supply 2	24V DC uncontrolled, max. Load 150mA, Protected via electronic fase
Inputs	24V DC / typ. 10mA signal length must be more than 100ms
Relay output	If inductive loads are to be switched (e.g. other relays) those have to be protected with free-wheeling Diodes contact load at 230V max. 1A
Temperature	Working: +0.... +40°C Storage: +0....+50°C
Humidity:	To 93% not condensing
Vibration:	Vibration free mounting, e.g. on flat built wall
Protection class	IP54 (CEE Plug), IP65 available

LIFETIME / DOORCYCLES

The GfA control panels working with electro mechanical contactor boards.
Contactor boards having generally a limited life time; this depends on the switched power of ELEKTROMATEN® in use and the amount of switching cycles. Therefore we recommend a replacement for control boards in use after doors having reached their confirmed lifetime cycles. Coherence between power and amount of cycles for ELEKTROMATEN® describes diagram bellow.

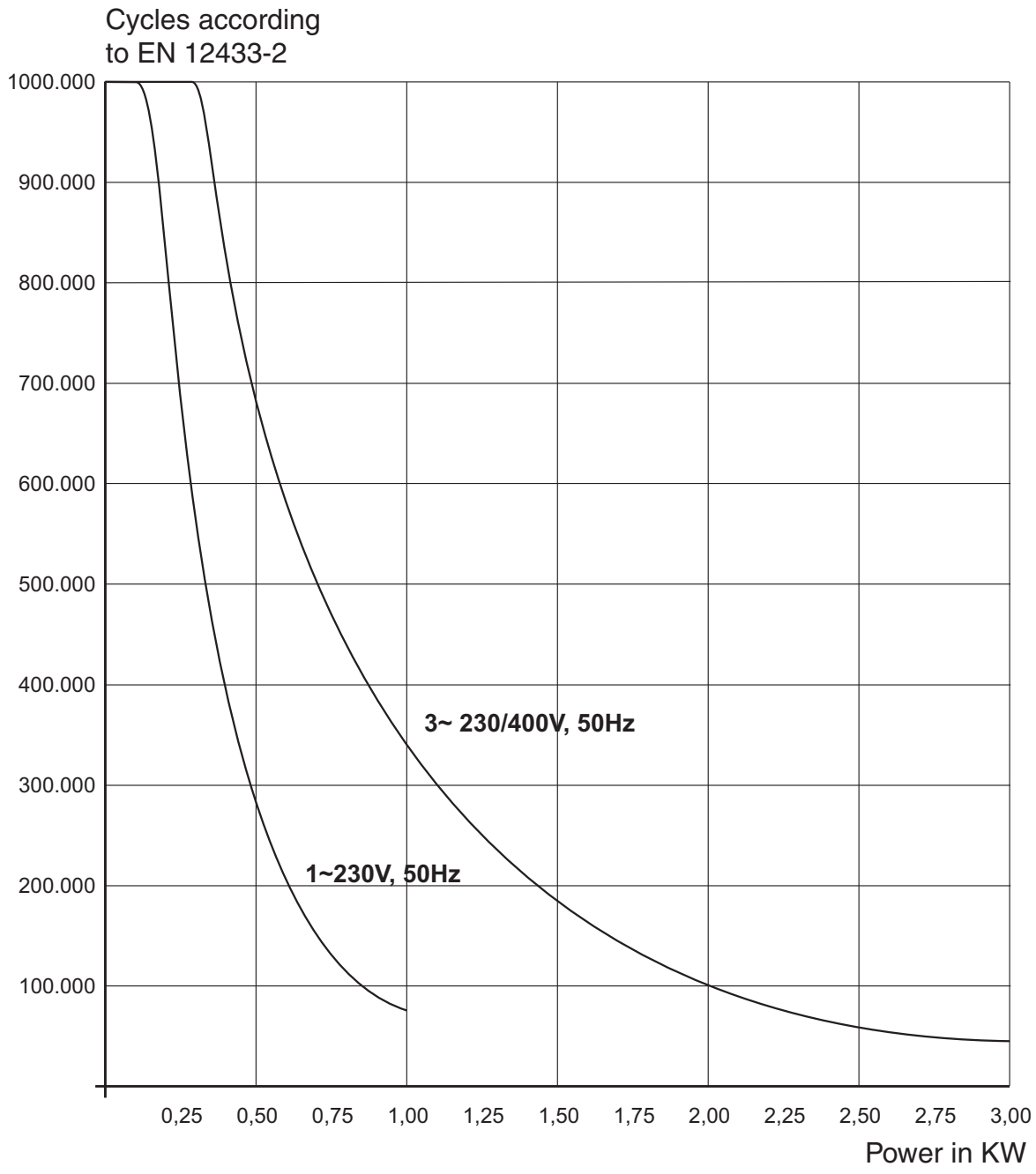

DECLARATION OF INCORPORATION

in the terms of Machinery Directive 2006/42/EC
for partly completed machinery, Appendix II Part B

GfA-Gesellschaft für Antriebstechnik
Dr.-Ing. Hammann GmbH & Co. KG
Wiesenstraße 81
40549 Düsseldorf
Telefon: +49 (0) 211-500 90 0
Telefax: +49 (0) 211-500 90 90
www.gfa-elektromaten.de

Declaration of conformance

in terms of EMC Directive 2004/108/EC

We, the

GfA - Gesellschaft für Antriebstechnik

hereby declare that the following products are conform with the above EC Guidelines and are only intended for installation in door equipment.

Door control panel TS 970

Standards applied

DIN EN 12453	Doors - safety in use of power operated doors
DIN EN 12978	Industrial, commercial and garage doors and gates - Safety devices for power operated doors - Requirements and Test methods
DIN EN 60335-1	Safety of household and similar electrical appliances Purposes - Part 1 : General requirements
DIN EN 61000-6-2	Electromagnetic compatibility (EMC) Part 6-2 Generic standard – Emission standard for industrial environments
DIN EN 61000-6-3	Electromagnetic compatibility (EMC) Part 6-3 Generic standard – Emission standard for residential, commercial and light-industrial environments

We undertake to transmit in response to a reasoned request by the appropriate regulatory authorities the special documents on the partly completed machinery.

Authorised representative for the compilation of the relevant technical documents

(internal EU address)

Dipl. Ing. Bernd Synowsky
Documentation representative

Incomplete machines within the meaning of the EC Directive 2006/42/EC shall only be intended to be integrated into other machines (or into other incomplete machines/systems) or to be assembled with them to form a complete machine within the sense of the Directive. Therefore, this product cannot be commissioned before it is determined that the entire machine/system to which it was integrated shall comply with the provisions of the Machinery Directive indicated above.

Düsseldorf, 01. 01. 2010

Stephan Kleine
CEO

Signature

FUNCTION OVERVIEW

- **Control panel for ELEKTROMATEN®** up to. 3 kW at 400V / 3~ with electronic limit **DES** designed for only low-level adjustment
- **7- Segment led display showing**
  - Programming the control panel
  - Displays Command - / Info- / Fault
- **Mains supply**
  - 400V / 3~ with and without Neutral
  - 230V / 3~
  - 230V / 1~ (for single-phase motors)
- **Door operating modes**
  - Deadman open- and close
  - Self-hold open- and dead-man mode close (without safety edge)
  - Automatic open- and close (with safety edge connected)
- **Integrated safety edge systems**
  - 8K2 normally open contact
  - 1K2 normally close contact
  - optical safety edge system (System Vitector)
- **Automatic close feature**
  - Free programmable from 1 up to max. 240 Sec.
  - On interrupting and re-making light barrier closing after 3 sec..
  - Can be interrupted by a separate switch
- **Supply for external devices**
  - 230V (at 400V / 3~ with N), up to 1A load
  - 24V DC, up to 150mA load
- **Plug for 5 pole motor connector 6 pole for electronic limit DES**
- **Plug for spiral cable (safety edge and pass-door contact)**
- **Integrated internal pushbutton OPEN / STOP / CLOSE**
- **Additional terminals for different control equipment**
  - Emergency stop (LATCHING)
  - Additional safety stops
  - External three push button OPEN / STOP / CLOSE
  - Light barrier activated Stop and Reverse function, time reset, time interruption 3 sec.
  - One channel - impulse functions e. g. Ceiling pull switch for OPEN / CLOSE / STOP – sequencing or radio control
  - Key switch (latching) for intermediate Stop
  - 1x potential free relay output (NC / NO), output signal from aux. limit
    If a signal lamp is in use, the potential free limit is not available